PROJECT 31: Design and Analysis of JK Flip-Flop by using Cadence Virtuoso

A Comprehensive Study of Analog Circuits

By: Priya Chaudhary, Astitva Johri and Bhavya Solanki

Chapters:

List of Figures……..…… 3

1. Introduction …….. 4
2. Brief Description…… 5
3. Circuit Design……. 6-7
   3.1 Schematic Design……... 6
   3.2 Simulation Setup...…….. 6
   3.3 Transient Response……. 6
4. Simulation Results…….. 8
5. Advantages and Disadvantages…….. 9
   5.1 Advantages……. 9
   5.2 Disadvantages……. 9
6. Conclusion…….. 10
7. Frequently Asked Questions (FAQs)…….. 11

LIST OF FIGURES

Figure 3.1 Circuit of 2 Input NAND Gate ……..…..…... 7

Figure 3.2 Circuit of 3 Input NAND Gate ..……..…... 7

Figure 3.3 Circuit of JK Flip-Flop …….……..…..…..... 7

Figure 4.1 Simulation Results of JK Flip-Flop ……..……... 8

1. INTRODUCTION

A JK Flip-Flop is a fundamental bistable sequential circuit that overcomes the limitations of the SR Flip-Flop by eliminating the indeterminate state. It operates based on two inputs, J (Set) and K (Reset), along with a clock signal that synchronizes state transitions.

In Cadence Virtuoso, designing a JK Flip-Flop using 2-input and 3-input NAND gates allows engineers to study its behavior under different input conditions. Through simulation and analysis, waveform responses can be examined to ensure the proper functioning of the circuit.

Truth Table of JK Flip-Flop :-

J	K	Q (Previous)	Q (Next)
0	0	0	0
0	0	1	1
0	1	0	0
0	1	1	0
1	0	0	1
1	0	1	1
1	1	0	1
1	1	1	0

2. BRIEF DESCRIPTION

A **JK Flip-Flop** is a fundamental bistable sequential circuit that serves as an essential building block in digital electronics. It is an advanced version of the SR Flip-Flop, overcoming the limitations posed by the indeterminate state when both inputs are high. The JK Flip-Flop ensures reliable toggling behavior by incorporating feedback mechanisms through NAND gates, making it a preferred choice for various digital applications.

The JK Flip-Flop consists of two inputs, J (Set) and K (Reset), along with a clock signal that synchronizes state transitions. The flip-flop operates in four distinct states: No Change, Reset, Set, and Toggle. The incorporation of NAND gates allows the circuit to effectively manage these state transitions by controlling the logical conditions at the inputs.

When designing a JK Flip-Flop using 2-input and 3-input NAND gates in Cadence Virtuoso, it is essential to construct a proper circuit schematic and analyze its transient behavior under various input conditions. Cadence Virtuoso provides a robust platform for designing, simulating, and verifying digital circuits, allowing engineers to validate the behavior of the JK Flip-Flop through waveform analysis.

By simulating the JK Flip-Flop in Cadence Virtuoso, we can study its response to different clock and input conditions, ensuring it meets functional requirements. Understanding the design and behavior of JK Flip-Flops is crucial for developing efficient digital systems, including counters, registers, and memory elements, which form the backbone of modern computing devices.

3. CIRCUIT DESIGN

3.1 Schematic Design

- Open Cadence Virtuoso and create a new schematic cell for the JK Flip-Flop.
- Place the required components: 2-input and 3-input NAND gates.
- Connect the inputs (J, K, and Clock) and outputs (Q and Q').
- Ensure correct power and ground connections.
- Verify the circuit connectivity using the Design Rule Check (DRC).

3.2 Simulation Setup

- Open the Cadence ADE (Analog Design Environment) tool.
- Select transient analysis for a specified time range.
- Apply clock pulses and various input combinations (00, 01, 10, 11).
- Configure the output waveforms for analysis.
- Run the simulation and observe logical state transitions.

3.3 Transient Response

- Analyze the simulated waveforms to verify expected behavior.
- Validate state changes based on clock pulses and input values.
- Ensure proper toggling when J=1 and K=1.
- Identify any propagation delays or glitches and refine the design if necessary.

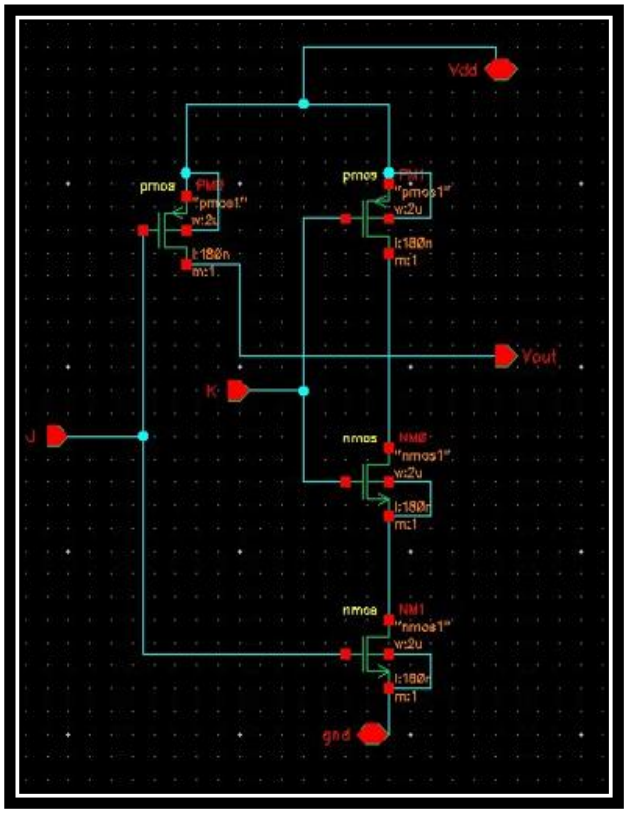

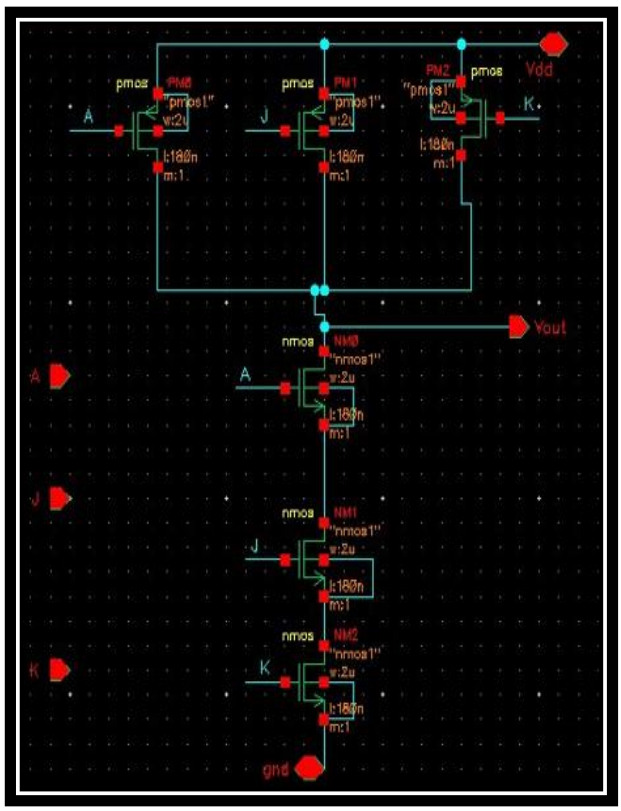

Figure 3.1 Circuit of 2 Input NAND Gate

Figure 3.2 Circuit of 3 Input NAND Gate

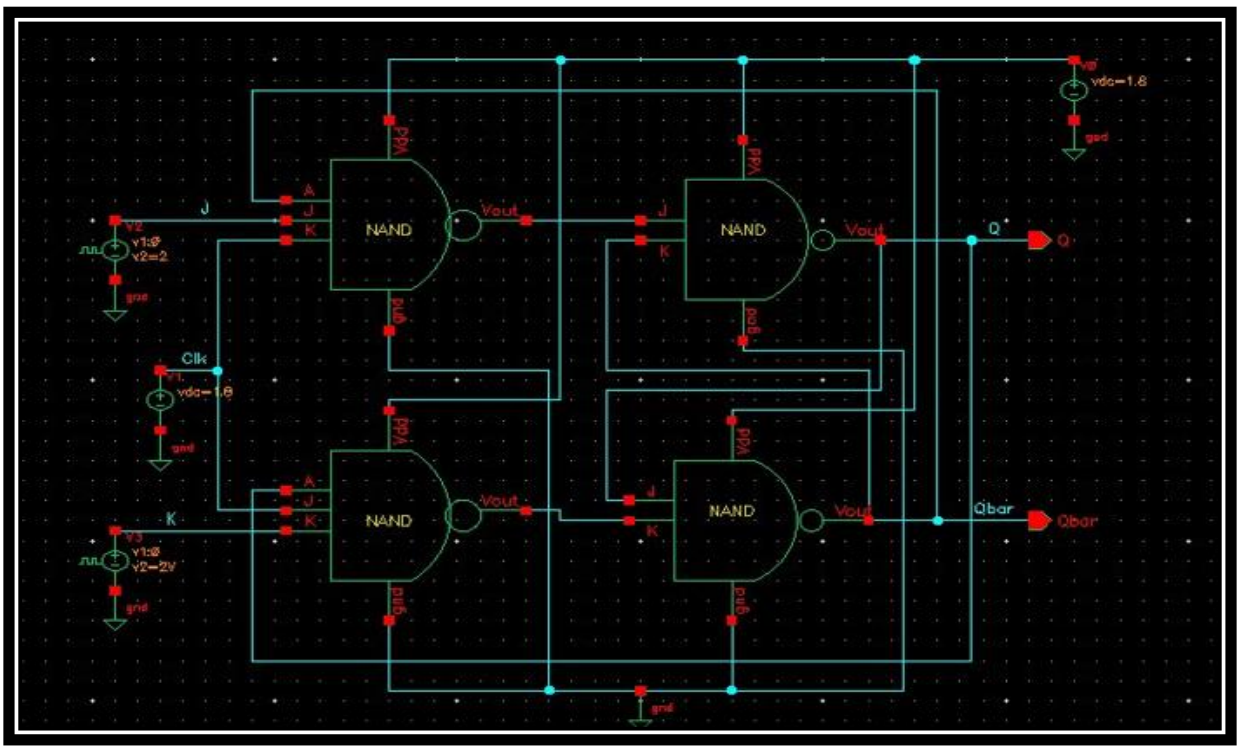

Figure 3.3 Circuit of JK Flip-Flop

4. SIMULATION RESULTS

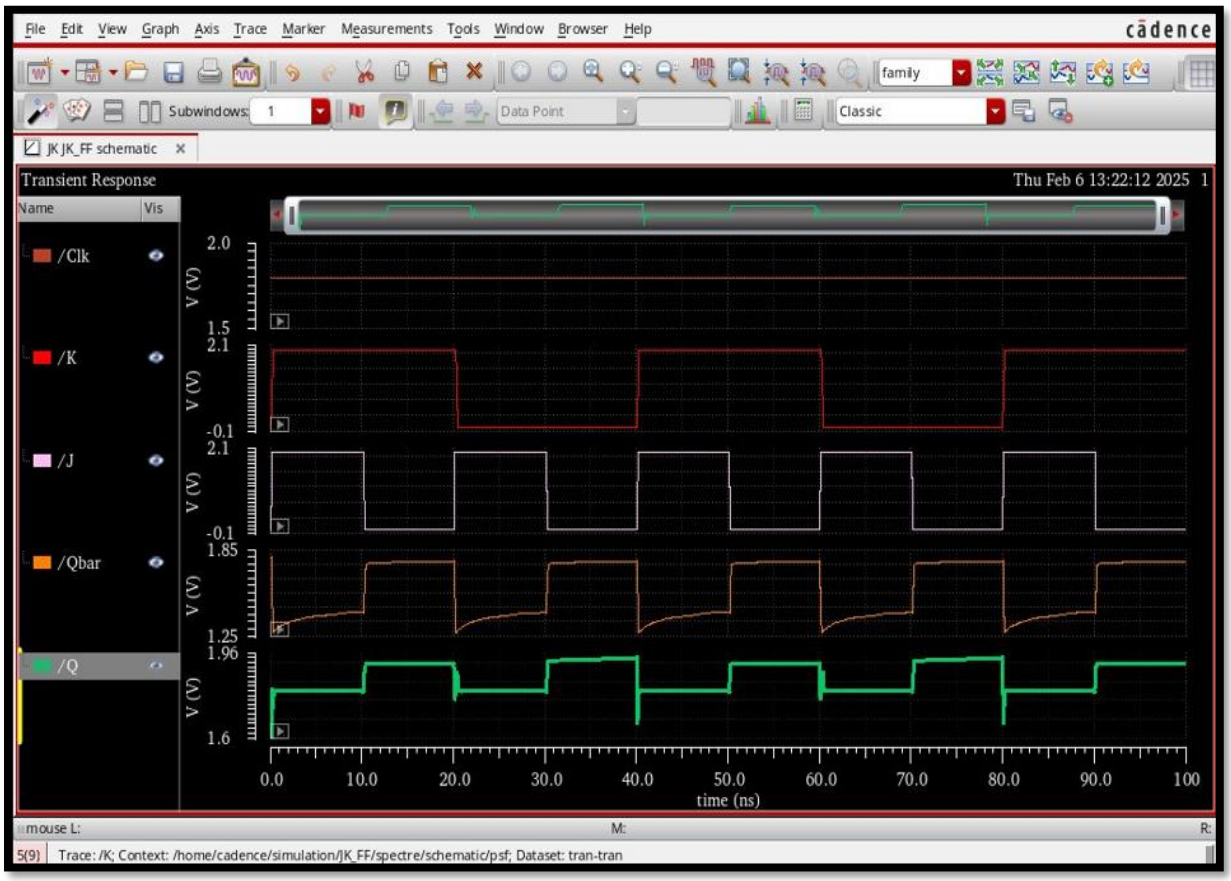

Figure 4.1: Simulation Results of JK Flip-Flop

5. ADVANTAGES AND DISADVANTAGES

5.1 Advantages:-

1. **No Indeterminate State:** Unlike SR flip-flops, JK flip-flops avoid undefined conditions.
2. **Toggle Functionality:** Useful in counters and frequency division.
3. **Versatile Design:** Can function as a T or D flip-flop.
4. **Accurate Simulation:** Cadence Virtuoso provides precise analysis of performance.
5. **Easy Integration:** Works well within larger digital circuits.

5.2 Disadvantages:-

1. **Higher Complexity:** More logic gates increase circuit size.
2. **Propagation Delay:** Feedback connections slow response time.
3. **More Power Consumption:** Increased gate count leads to higher power usage.
4. **Race-Around Condition:** Rapid oscillations occur at high clock speeds.
5. **Layout Challenges:** Requires careful transistor-level design in Cadence Virtuoso.

6. CONCLUSION

The JK Flip-Flop remains a cornerstone of digital electronics due to its improved functionality over SR Flip-Flops. Its ability to toggle states and eliminate undefined conditions makes it highly suitable for a range of applications, from data storage to synchronous counting circuits.

By leveraging Cadence Virtuoso for designing and simulating JK Flip-Flops using 2-input and 3-input NAND gates, engineers gain valuable insights into sequential circuit behavior. The simulation process helps in understanding timing constraints, propagation delays, and the overall reliability of digital systems.

Furthermore, mastering the implementation of JK Flip-Flops in Cadence Virtuoso aids in developing more complex logic circuits that require synchronization and state retention. As digital systems continue to evolve, a strong grasp of JK Flip-Flops and their practical implementation remains crucial for designing robust and efficient electronic circuits. Through meticulous analysis and verification, the knowledge gained from this experiment contributes significantly to advancements in digital circuit design and optimization.

7. FREQUENTLY ASKED QUESTIONS (FAQs)

Q1. Why use NAND gates to design a JK Flip-Flop?
Answer: NAND gates are universal gates that can implement any logic function, making them suitable for designing flip-flops.

Q2. What is the significance of the clock signal in a JK Flip-Flop?
Answer: The clock signal synchronizes state transitions, ensuring the output changes occur at defined intervals.

Q3. How does a JK Flip-Flop eliminate the indeterminate state of an SR Flip-Flop?
Answer: It uses feedback logic to toggle the state when both J and K are 1, preventing the invalid state.

Q4. Can this JK Flip-Flop design be implemented in VLSI?
Answer: Yes, the design can be integrated into VLSI circuits using Cadence Virtuoso for chip fabrication.

Q5. What challenges are faced during layout design in Cadence Virtuoso?
Answer: Challenges include ensuring correct spacing, avoiding design rule violations, and verifying layout vs. schematic consistency.